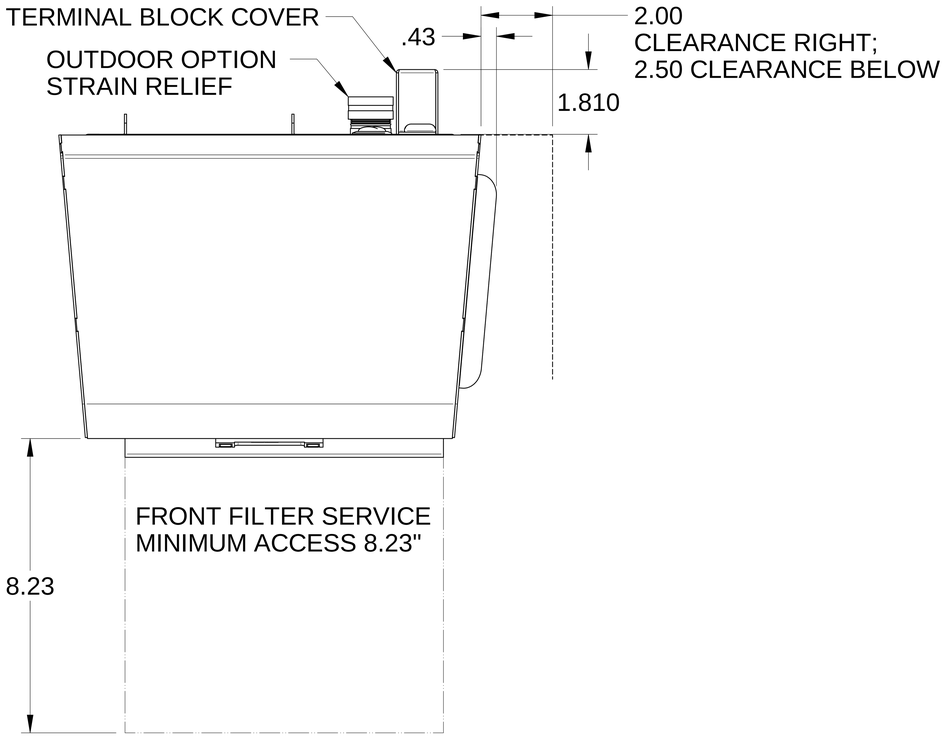

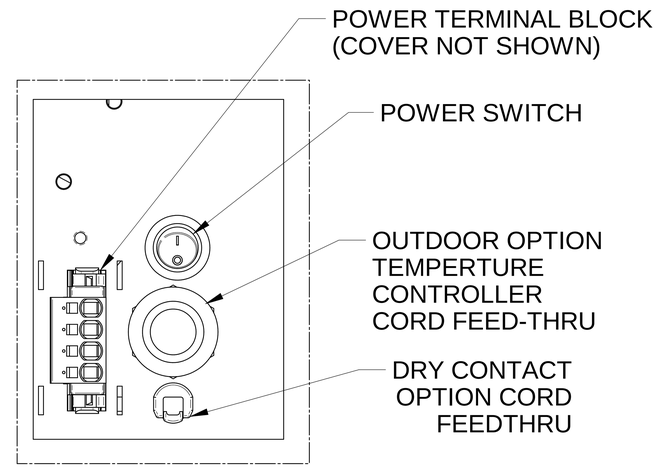

DETAIL A

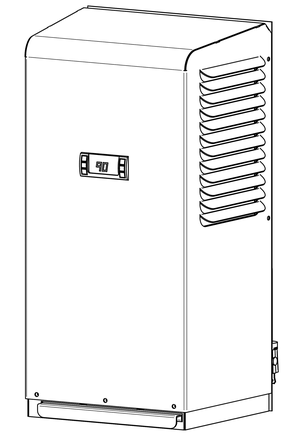

1/2 SCALE

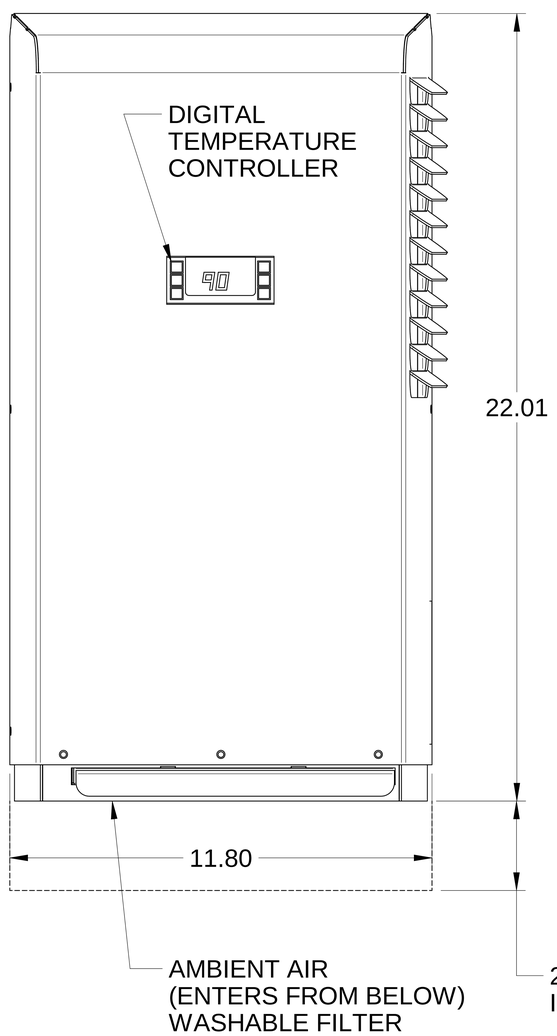

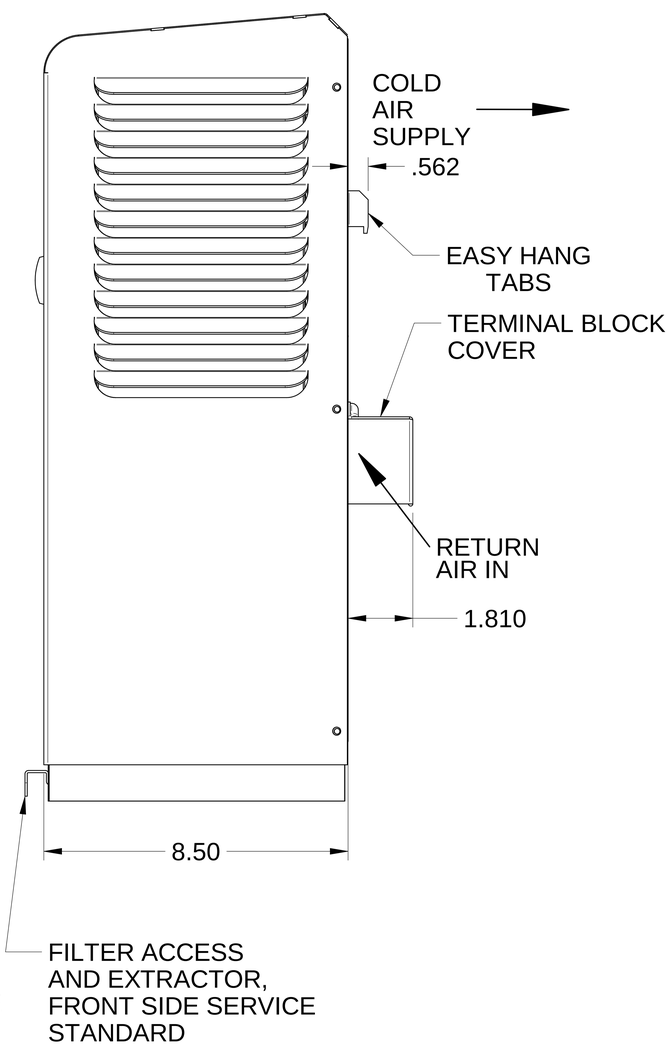

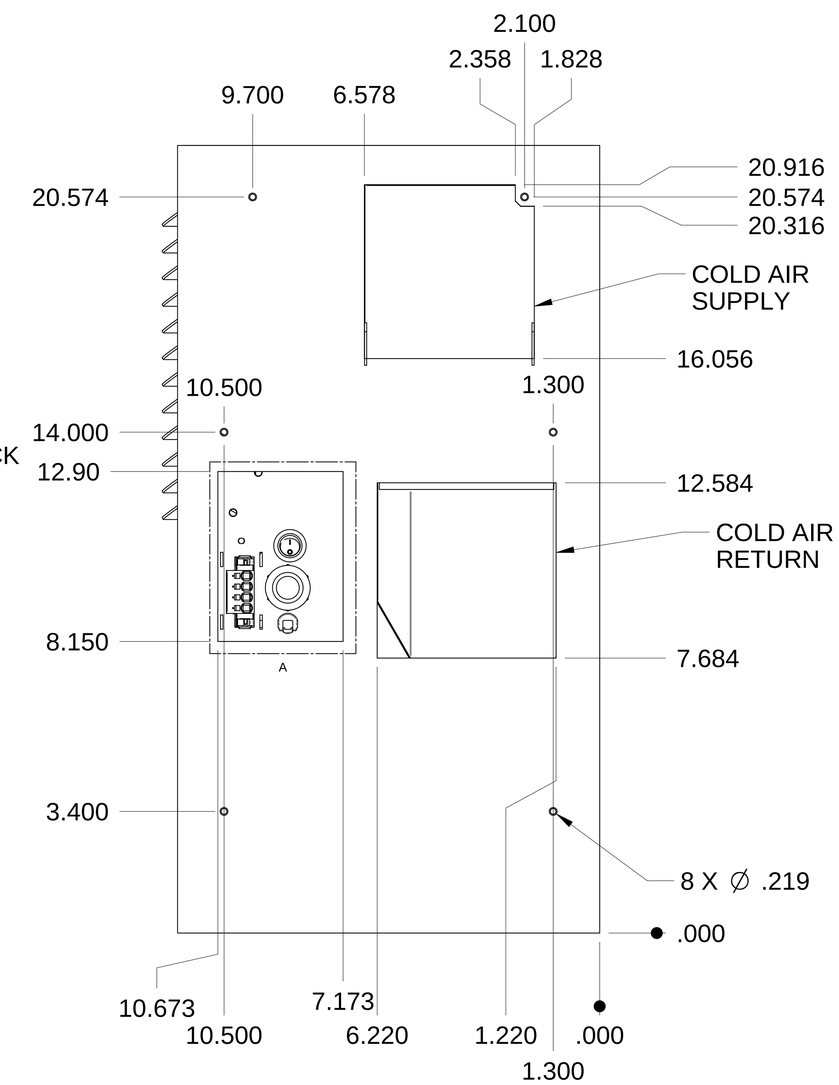

CUTOUT DIMENSIONS
AS VIEWED FROM
INSIDE ENCLOSURE

TITLE: NARROW EDGE NE015 115V AND 230V TERMINAL BLOCK MODELS			
SIZE: 72 X 54	DWG NO: NE015		REV: D 10/28/2015
Filename: tec_ne_015_drawing.dft			
SCALE:	WEIGHT:	SHEET 1 OF 1	